Volume 5, Issue 2, February 2015 ISSN: 2277 128X

International Journal of Advanced Research in Computer Science and Software Engineering

Research Paper

Available online at: www.ijarcsse.com

A Literature Survey of Image Denoising Techniques in the Spatial Domain

Tariq Ahmad Lone*[1], Showkat Hassan Malik[2], S.M.K Quadri[3]

[1, 2] Research Scholars, Department of Computer Science, Mewar University, Chittorgarh, Rajasthan, India

[3] Professor, Deptt. of Computer Applications, University of Kashmir, Srinagar, J & K, India

***Abstract:** Noise removal is a challange faced by the research community around the globe. Since its inception, a lot of work has been carried out to identify and remove noise from signals/images. Researchers have attempted procedures in various domains to better the performance in noise removal. Although, generally classified into two domains viz. Spatial domain and frequency domain, image denoising techniques have been studied in length and breadth to get better results. This paper attemps to provide a literature survey of denoising techniques focussing on spatial domain denoising techniques, later to be followed by survey in other domains.*

***Keywords:** Spatial filters, Mean filter, Median filter, Min, Max, Denoising, WMF, CWMF.*

I. INTRODUCTION

Everywhere we are faced with pollution. This does not even leave images when we capture, communicate, store or work on them. This pollution of images is called Noise. Researchers are facing a big challenge while dealing with such contaminated images. A reverse process has to be applied to remove this noise and this noise removal process is called Denoising. Extensive work has been done in this area and we come across a sea of information about the techniques that have been proposed, worked upon and implemented to denoise images.

Modeling noise is influenced by various agents including image capturing devices and instruments, image transmission through different media, digitization process and environmental factors. Before applying any denoising technique, it is sometimes very important to identify the type of noise that has corrupted the image.

II. EVOLUTION OF THE SPATIAL DOMAIN DENOISING TECHNIQUES

The earliest work carried out in the field of denoising started when simple filtering principles were applied to signals to denoise them. The earliest filters used were linear filters like Mean and Wiener filters. Many variants of these filters have been devised over a period of time to make them more effecient and effective.

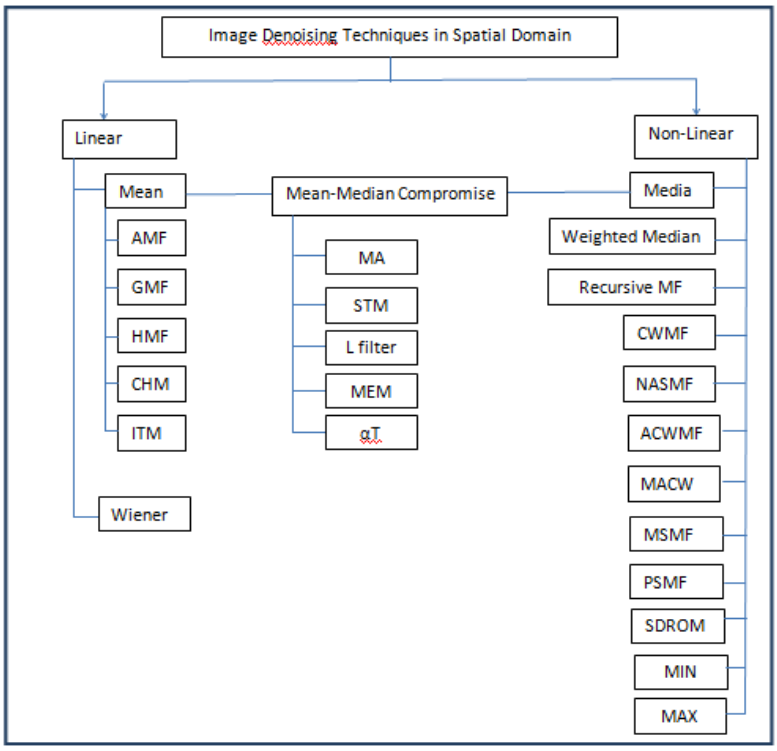

Fig. An outline of Image Denoising Techniques referred in the paper

© 2015, IJARCSSE All Rights Reserved

III. DISCUSSION

Spatial filtering has been classified into two types- Linear and Non-linear. Filtering is done to improve the visualisation of an image. In spatial domain filtering is done directly on the pixels of the image to improve it. Pixels are worked upon in some way for improving the image contents.

a) Linear Filtering:

Commonly used linear filters are Mean [1],[2] and Wiener [3],[4]. The mean filter includes Arithmetic Mean Filter (AMF), Geometric Mean Filter (GMF), Harmonic Mean Filter (HMF) and Contraharmonic Mean Filter (CHMF) [5].

AMF smoothes local variations at the cost of blurring. GMF performs smoothing as good as AMF but loses image details. HMF has been observed to work well for Gaussian and salt noise but performs very poor in case of Pepper noise. The CHMF is observed to work excellent in eliminating salt and pepper noise [5]. The disadvantages of mean filtering include blurring of edges and non-robustness to large noise deviations in the image [6]. Mean filter is most suitable for removing White Guassian Noise (WGN) and does not perform good Salt & Pepper noise.

A recent addition to the class of mean filters includes Iterative Truncated Arithmetic Mean Filter (ITM) as described in [7]. Another variant of Mean filter is Robust Outlyingness Ratio Non-local Means filter [8]. Other variant techniques include Geometric Mean and Harmonic Mean as described in [5]. Mean filter is simplest of all filters and works by means of giving equal weight to all neighbourhood pixels.

Wiener filter is the Mean Square Erroe-optimal linear filter for blurred images contaminated with additive noise[4]. The wiener filtering requires information about the spectrum of the noise and the original signal [9].

b) Non-linear Filtering:

Median Filter [10] is the most used and talked about filter in the image denoising literature.The median filter generates output by sorting the input values and selects the middle value as the output. This class of non-linear filters has proved very useful for filtering noise. It has two very important properties of edge preservation and robustness against large noise deviations as against mean filtering [11]. The main drawbacks associated with median filter are removal of important image details [12], Jitter [13] and streaking [14].

Median filter actually belongs to a class of filters called Rank filters [6]. Many extended versions of median filter have been suggested like in [15],[16], [17],[18]. Min and Max filters are two important rank order filters with Min value and Max value in the window as their output respectively [11]. These two filters are fundamental in morphological filtering, with flat structuring elements viz. Erosion and dilation [19], [20],[21],[22].

One more extended version of Median filter is Recursive Median Filter [23].In recursive median filter, the filtering process is performed “in-place” so that the output replaces the input value before the filter window is moved to the next position [11].

Another class of median filters is the Weighted Median Filter, introduced as a generalisation of the standard median filter, where a non negative integer weight is assigned to each position in the filter window [24],[25],[26].

Gajanand Gupta [27] has described an improved Median Filter along with a comparative study of Mean and Median filters. Center Weighted Median Filter (CWM), a modified case of Weighted Median Filter, has been discussed in [28],[29]. Adaptive Center Weighted Median Filter (ACWM) has been discussed in [30]. Switching Based Median Filter techniques proposed in [31],[11] used ‘no-filtering’ to retain true pixels. An extension of these techniques was proposed as Noise Adaptive Soft-Switching Median (NASM) filter in [32]. Adaptive Median Filter for impulsive noise suppression has been discussed in [33], which itself is modified version of Modified Adaptive Center Weighted Median (MACWM) filter [33]. Adaptive Two-Pass Median Filter was provided as an extension of Median Filter in[34].

Many extended versions of basic switching median filter have been proposed in the literature. The Tristate Median Filter [35] is an improvement over Switched Median Filter. The Tristate median filter has been further worked upon and Multistate Median (MSM) Filter [36] has been developed.

One more derivation of basic switching median filter is the Progressive Switching Median (PSM) Filter [37]. Another filter in the median based domain that utilizes Rank Order Information for impulse noise removal is the Signal-Dependent Rank-Ordered Median (SDROM) filter [38].

Many drawbacks of Median Filter and many of its derivatives have been addressed in Decision Based Filter proposed in [39]

Apart from the linear and nonlinear filtering techniques, many techniques were developed where a compromise between mean and median filters was made [7]. Many such filters are Median Affine (MA) filter [40], STM filter, L filter [41], the mean median (MEM) filter [42], [43] and the α- trimmed mean filter (αT) [44], [45].

A pleuthora of past literature is also avaliable in the form of surveys and comparative studies of denoising techniques like [39], [46], [47], [9], [48], [11], [27], [33].

IV. CONCLUSION

This paper is an attempt to explore the denoising literature from the vast volumes of information avaliable in the image processing domain. We have tried to go deep in to this domain of sea of information especially in the spatial domain though a little passing reference has also been made, at a few places, to frequency domain techniques. There is still a lot of scope to go further into the ocean of knowledge to find out the new techniques being designed, developed to better the performance and results of denoising techniques. The authors are also on their way to extend this study to frequency domain and to explore the denoising literature in the context of Artificial Neural Networks.

© 2015, IJARCSSE All Rights Reserved

REFERENCES

[1] Kaisar S, Rijwan S, Al Mahmud J, and M Rahman M, "Salt and Pepper Noise Detection and Removal by Tolerance Based Selective Arithmetic Mean Filtering Technique For Image Restoration," International Journal of Computer Science and Network Security, vol. 8, no. 6, June 2008.

[2] P Windyga S, "Fast impulsive noise removal," IEEE Transactions on image processing, vol. 10, no. 1, pp. 173-178, 2001.

[3] T Kailath, "Equations of weiner-hopf type in filtering theory and related applications," in Norbert Wiener: Collected Works Vol III, P Masani, Ed. Cambridge MA: MIT Press, 1976, pp. 63-94.

[4] A K Jain, Fundamentals of Digital Image Processing, 1st ed.: Prentice Hall, 1989.

[5] C Gonzalez Rafael and E Woods Richard, Digital Image Processing, 2nd ed.: Pearson Education, 2005.

[6] Solomon Chris and Breckon Toby, Fundamentals of Digital Image Processing A Practical Approach With Examples in Matlab.: Wiley-Blackwell, 2011.

[7] Jiang Xudong, "Iterative Truncated Arithmetic Mean Filter And Its Properties," IEEE Transactions on Image Processing, vol. 21, no. 4, pp. 1537-1547, Apr. 2012.

[8] Bo Xiong and Zhouping Yin, "A universal denoising framework with a new impulse detector and nonlocal means," IEEE Transactions on image processing, vol. 21, no. 4, Apr. 2012.

[9] M C Motwani, M C Gadiya, R C Motwani, and F C Haris, "Survey of Image Denoising Techniques".

[10] W Tukey J, "Nonlinear methods for smoothing data," in Conf. Rec. EASCON`74, 1974, p. 673.

[11] Yin Lin, Yang Ruikang, Gabbouj Moncef, and Neuvo Yrjo, "Weighted Median Filters: A Tutorial," IEEE Transactions on Circuits And Systems-II: Analog and Digital Signal Processing, vol. 43, no. 3, Mar. 1996.

[12] R Arce G and E Foster R, "Detailed Preserving Rank-Order based filters for image processing," IEEE Transactions Acoustics, Speech, Signal Processing, vol. 37, pp. 83-98, Jan. 1989.

[13] C Bovik A, S Huang T, and C Munson Jr D, "The effect of median filtering on edge estimation and detection," IEEE Transactions on Pattern Analysis And Machine Intelligence, vol. PAMI-9, pp. 181-194, Mar. 1987.

[14] C Bovik A, "Streaking in median filtered images," IEEE Transactions on Acoustics, Speech, Signal Processing, vol. ASSP-35, pp. 493-503, Apr. 1987.

[15] R Dougherty E and Astola J, An Introduction to Nonlinear Image Processing. New York: SPIE Press, 1994, vol. TT16.

[16] Gabbouj M, "Weighted Median Filtering-Striking analogies to FIR filters," in IEEE circuits and systems tutorials., 1994, ch. 1.11, pp. 5-21.

[17] Pitas I and N Venetsanopoulos A, Nonlinear Digital Filters: Principles and applications. Boston: MA Kluwer Academic, 1990.

[18] Viero T and Neuvo Y, "3-D median structures for image sequence filtering and coding," in Motion analysis and Image sequence Processing, I Sezan M and L Lajendijk R, Eds. Boston: MA KluwerAcademic, 1993.

[19] R Giardina C and R Dougherty E, Morphological Methods in Image and Signal Processing. New JerseyPrentice Hall, 1988.

[20] Maragos P and W Schafer R, "Morphological Filters-Part I: Their set theoretic analysis and relations to linear shift invariant filters," IEEE Transactions on Acoustics, Speech, Signal Processing, vol. ASSP-35, pp. 1153-1169, Aug. 1987.

[21] Maragos P and W Schafer R, "Morphological Filters-Part II: Their relation to median, order-static and stack filters," IEEE Transactions on Acoustics, Speech, Signal Processing, vol. ASSP-35, pp. 1170-1184, Aug. 1987.

[22] Serra J, Image Analysis and Mathematical Morphology. London: Academic, 1982.

[23] A Nodes T and C Gallagher Jr N, "Median Filters: Some modifications and their properties," IEEE Transactions on Acoustics, Speech, Signal Processing, vol. ASSP-31, pp. 739-746, Oct. 1983.

[24] R K. Brownrigg D, "The Weighted Median filter," Commun. ACM, vol. 27, no. 8, pp. 807-818, Aug. 1984.

[25] I Justusson B, "Median Filtering: Statistical Properties," in Two-Dimensional Digital Signal Processing II. New York: Springer-Verlag, 1981.

[26] Brownrigg D, "The Weighted Median Filter," Commun. Assoc. Computer, pp. 807-818, Mar. 1984.

[27] Gupta Gajanand, "Algorithms for Image Processing Using Improved Median FilteraAnd Comparison of Mean, Median and Improved Median Filter," International Journal Of Computing and Engineering (IJSCE), vol. 1, no. 5, pp. 304-3011, Nov. 2011.

[28] C C Chang, J Y Hsiao, and C P Hsieh, "An Adaptive Median filter for Image Denoising," in IEEE Second International Symposium on Intelligent Information Technology application, 2008, pp. 346-350.

[29] J Ko S and J Lee S, "Center weighted median filters and their applications to image enhancement," IEEE Transactions on Circuits and systems , vol. 15, pp. 984-993, Sep. 1991.

[30] C Lin T and T Yu P, "A new adaptive center weighted median filter for suppressing impulsive noise in images," Information Sciences, pp. 1073-1087, 2007.

[31] Sun T and Neuvo Y, "Detail-preserving median based filters in image processing," Pattern Recognition Letters, vol. 15, pp. 341-347, 1994.

[32] -Lung Eng How and -Kuang Ma Kai, "Noise Adaptive Soft-Switching Median Filter," IEEE Transactions on Image Processing, vol. 10, no. 2, pp. 242-251, Feb. 2001.

© 2015, IJARCSSE All Rights Reserved

[33] sadoghi Yazdi Hadi and Homayouni Faranak, "Impulsine noise suppression of images using adaptive median filter," International Journal of Signal processing, Image processing and Pattern Recognition, vol. 3, no. 3, pp. 1-12, Sep. 2010.

[34] Russo Fabrizio, "New method for performance evaluation of grayscale image denoising filters," IEEE Transaction Processing Letters, vol. 17, no. 5, May 2010.

[35] Chen T, -K Ma K, and -H Chen L, "Tristate median filter for image denoising," IEEE Transactions on Image Processing, vol. 8, no. 12, pp. 1838-1838, 1999.

[36] Chen T and R Wu H, "Space variant median filters for the restoration of impulse noise corrupted images," IEEE Transactions on Circuits and Systems II: Analog and Digital signal processing, vol. 48, no. 8, pp. 784-789, 2001.

[37] Wang Z and Zhang D, "Progressive switching median filter for the removal of impulse noise from highly corrupted images," IEEE Transactions on Circuits and Systems II: Analog and Digital signal processing, vol. 46, no. 1, pp. 78-80, 1999.

[38] Abreu E, Lightstone M, K Mitra S, and Arkawa K, "A new efficient approach for the removal of impulse noise from highly corrupted images," IEEE Transactions on image processing, vol. 5, no. 6, pp. 1012-1025, 1996.

[39] Judith M.C Geoffrine and Kumarasabapathy N, "Study and analysis of impulse noise reduction filters," Signal and Image processing: An International Journal (SIPIJ), vol. 2, no. 1, Mar. 2011.

[40] A Flaig, G R Arce, and K E Barner, "Affine order-statistic filters: "Medianization" of linear FIR filters," IEEE trnasactions on signal processing, vol. 40, no. 8, pp. 2101-2112, Aug. 1988.

[41] I Pitas and A N Venetsanopoulos, "Order statistics in digital image processing," Proc. of IEEE, vol. 80, no. 12, pp. 1893-1921, Dec. 1992.

[42] A B Hamza and H Krim, "Image Denoising: A nonlinear robust statistical approach," IEEE Transactions on Signal Processing, vol. 49, no. 12, pp. 3045-3054, Dec. 2001.

[43] T Aysal and K Barner, "Generalised mean-median filtering for robust frequency-selective applications," IEEE Transactions on signal processing, vol. 55, no. 3, pp. 937-948, May 2007.

[44] J B Bednar and T L Watt, "Alpha-trimmed means and their relationship to median filters," IEEE Transactions on Acoustics, Speech and signal processing, vol. ASSP-32, no. 1, pp. 145-153, Feb. 1984.

[45] S R Peterson, Y H Lee, and S A Kassam, "Some statistical properties of alpha-trimmed mean and standard type M filters," IEEE Transactions on Acoustics, Speech and signal processing, vol. 36, no. 5, pp. 707-713, May 1988.

[46] Vandana Roy and Shailja Shukla, "Spatial and transform domain filtering method for image denoising: A review," International Journal of Modern Education and Computer Science, vol. 7, pp. 41-49, Sep. 2013.

[47] Kanika Gupta and s K Gupta, "Image Denoising Techniques-A Review Paper," International Journal of Innovative Technologyand Exploring Enggineering, vol. 2, no. 4, pp. 6-9, Mar. 2013.

[48] Rosebell John and V. Karunakaran, "A Survey of Denoising Methods," IOSR Journal of Engineering, vol. 2, no. 10, pp. 85-89, Oct. 2012.

© 2015, IJARCSSE All Rights Reserved